SM214 Control Module

Suggested Chassis Wiring

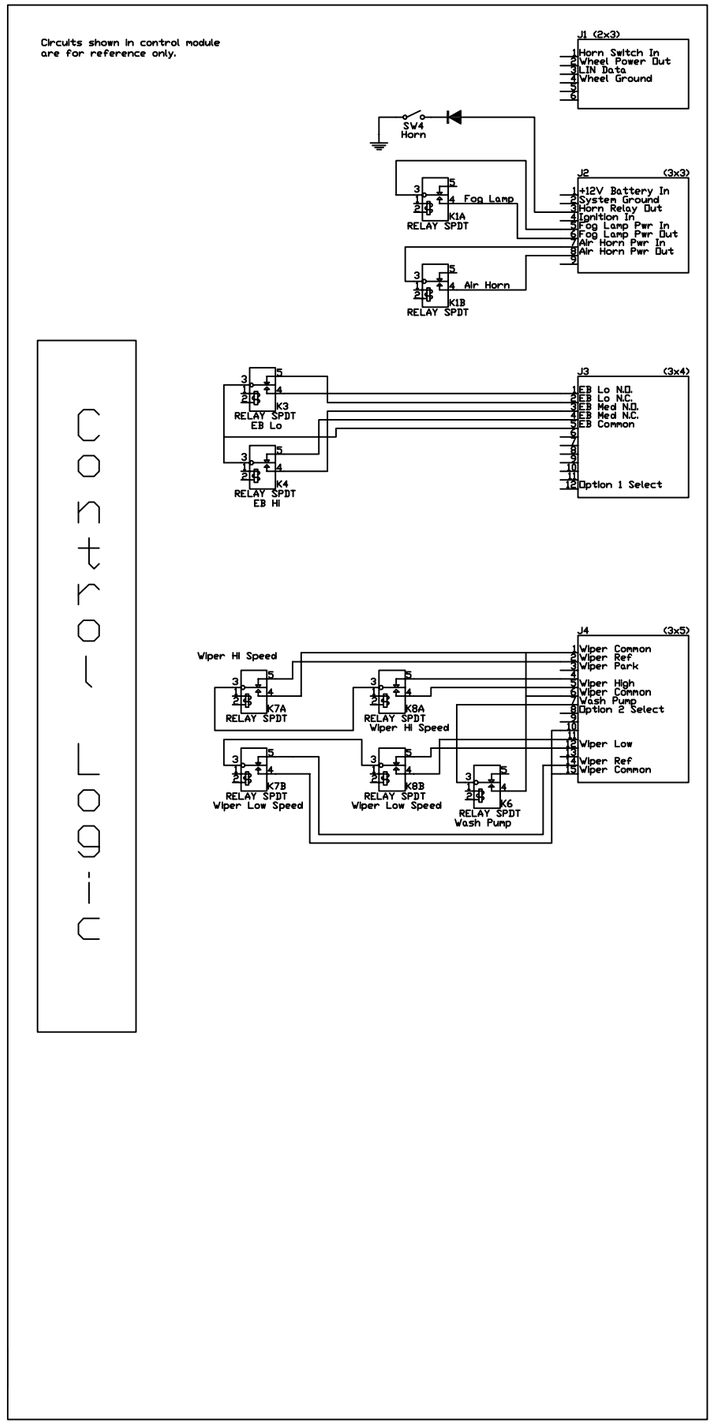

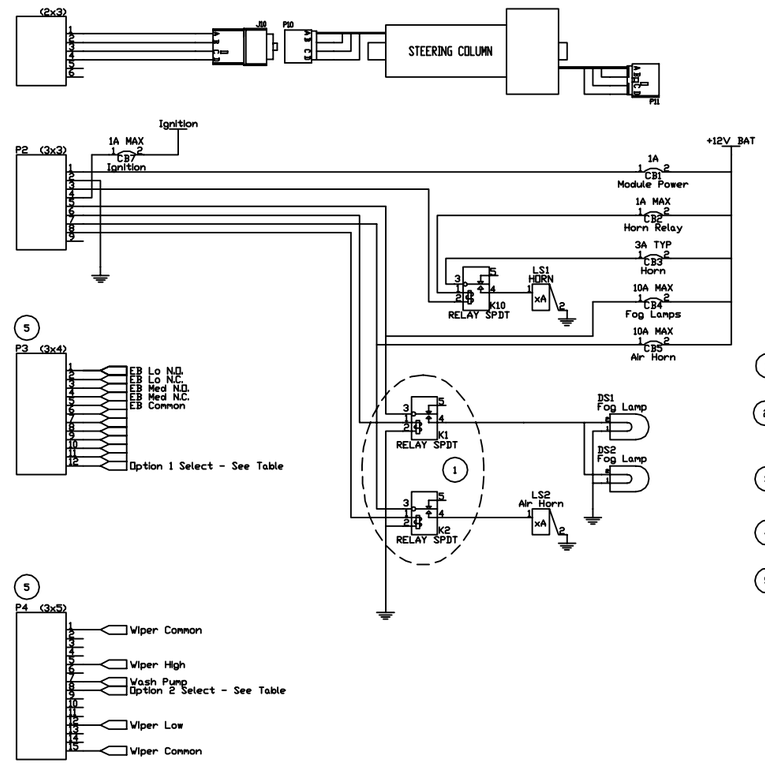

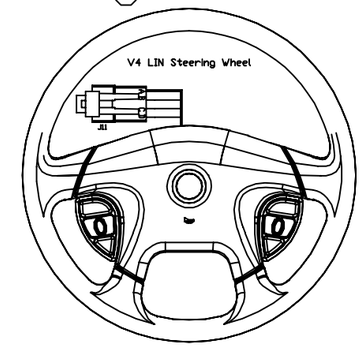

NOTES

1. Relays may be omitted if each respective load is 10 A total or less. Control module output is internally limited to 10 A if current limit is enabled on P4.8 and wiring is as shown.
2. The control module is designed to mount in the passenger compartment of the vehicle. The rated operating temperature range is -40 to +85 degrees C. The control module must not be exposed to the higher operating temperatures and moisture levels typical of the engine compartment or exposed areas of the vehicle.
3. Power ground for wiper motor(s) must always be provided by a chassis ground to the wiper motor case(s). The ground return to the control module is for dynamic braking and signal level reference only.
4. Circuit breaker ratings provided are typical or max allowable with appropriate wire selection. Proper wire and circuit protection is the responsibility of the installer. Unlabeled connections to controller other than wiper connections are rated for 1 A max.
5. Option selections are read on rising ignition.

Option 1 Select P3.12	V Batt	Diagnostic Mode
	Open	Operating Mode
	Ground	RFU

Option 2 Select P4.8	V Batt	Current Limit Enabled
	Open	Current Limit Disabled
	Ground	RFU

Control Module Connectors (Harness side)
P1: AMP 1-480704-0 Housing
P2: AMP 1-480706-0 Housing
P3: AMP 1-480708-0 Housing
P4: AMP 1-480710-0 Housing
P1-P4: AMP 350689-3 20-18 AWG socket contact

COLUMN CONNECTOR
J10: PACKARD 12092163 Housing
PACKARD 12047581 AVG 20 Terminal

DIM PL	ENG	MM
X.	.060	1.524
.X	.030	.762
.XX	.010	.254
.XXX	.005	.127
ANGLES ± 2°		

PART REV	DRW REV	DESCRIPTION	DATE
A	02	Wiper Circuit Changes	09-28-2009
A	01	Wiper Circuit Changes	09-17-2009
A	00	Preliminary	08-26-2009

THIS DRAWING AND ITS INFORMATION IS CONFIDENTIAL. IT IS THE PROPERTY OF VIP INC., AND MUST NOT BE MADE PUBLIC OR USED IN ANY WAY DETRIMENTAL TO THE INTERESTS OF VIP INC.

VEHICLE IMPROVEMENT PRODUCTS INC.

DRAWN BY	TITLE	FILE NO.
DK	WIRING, SM214	001778-E2V-00
DATE 08-26-2009	SCALE NONE	DRAWING NO. MPXW009
SIZE C	ANTIOCH, IL USA (847)-395-7250	