SM216 Control Module

Circuits shown in control module are for reference only.

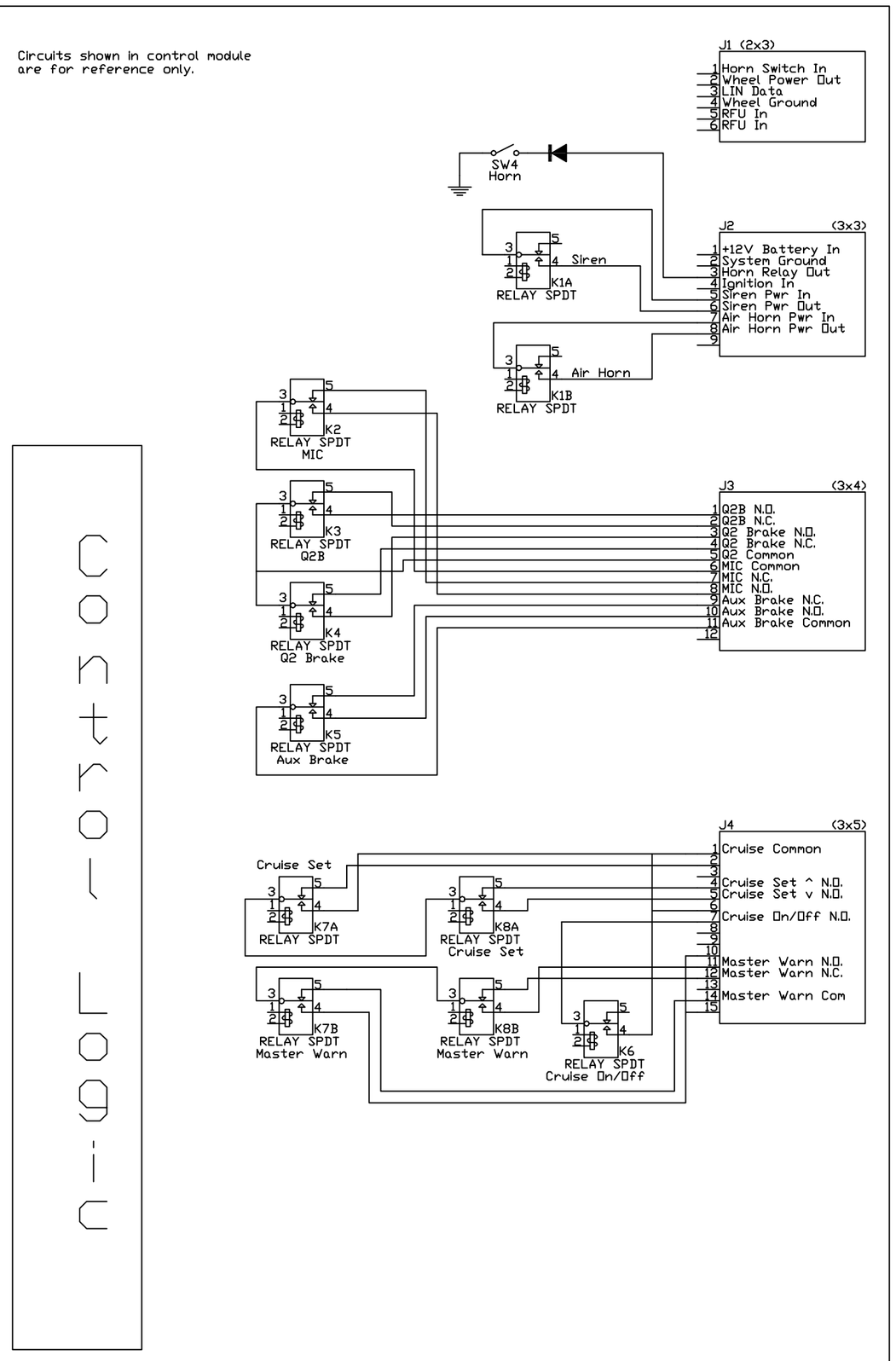

Wheel Button	Function	Relays	Connectors
SIREN	Momentary	K1A (Siren)	J2.5(In), J2.6(Out)
Q2B	Momentary	K3 (Q2B)	J3.5(Common), J3.1(NO), J3.2(NC)
MIC	Momentary	K2 (Mic)	J3.6(Common), J3.8(NO), J3.7(NC)
QBRK	Momentary	K4 (Q2 Brake)	J3.5(Common), J3.3(NO), J3.4(NC)
MW	Momentary	K7B, K8B (Master Warn)	J4.14(Common), J4.11(NO), J4.12(NC)
Air Horn	Momentary	K1B (Air Horn)	J2.7(In), J2.8(Out)
SET up	Momentary	K7A, K8A (Cruise Set Up)	J4.1(Common), J4.4(NO)
CRS	Maintained (Toggle)	K6 (Cruise On)	J4.1(Common), J4.7(NO)
SET down	Momentary	K7A, K8A (Cruise Set Down)	J4.1(Common), J4.5(NO)
AUX BRK	Maintained (Toggle)	K5 (Aux Brake)	J3.9(Common), J3.11(NO), J3.10(NC)

Suggested Chassis Wiring

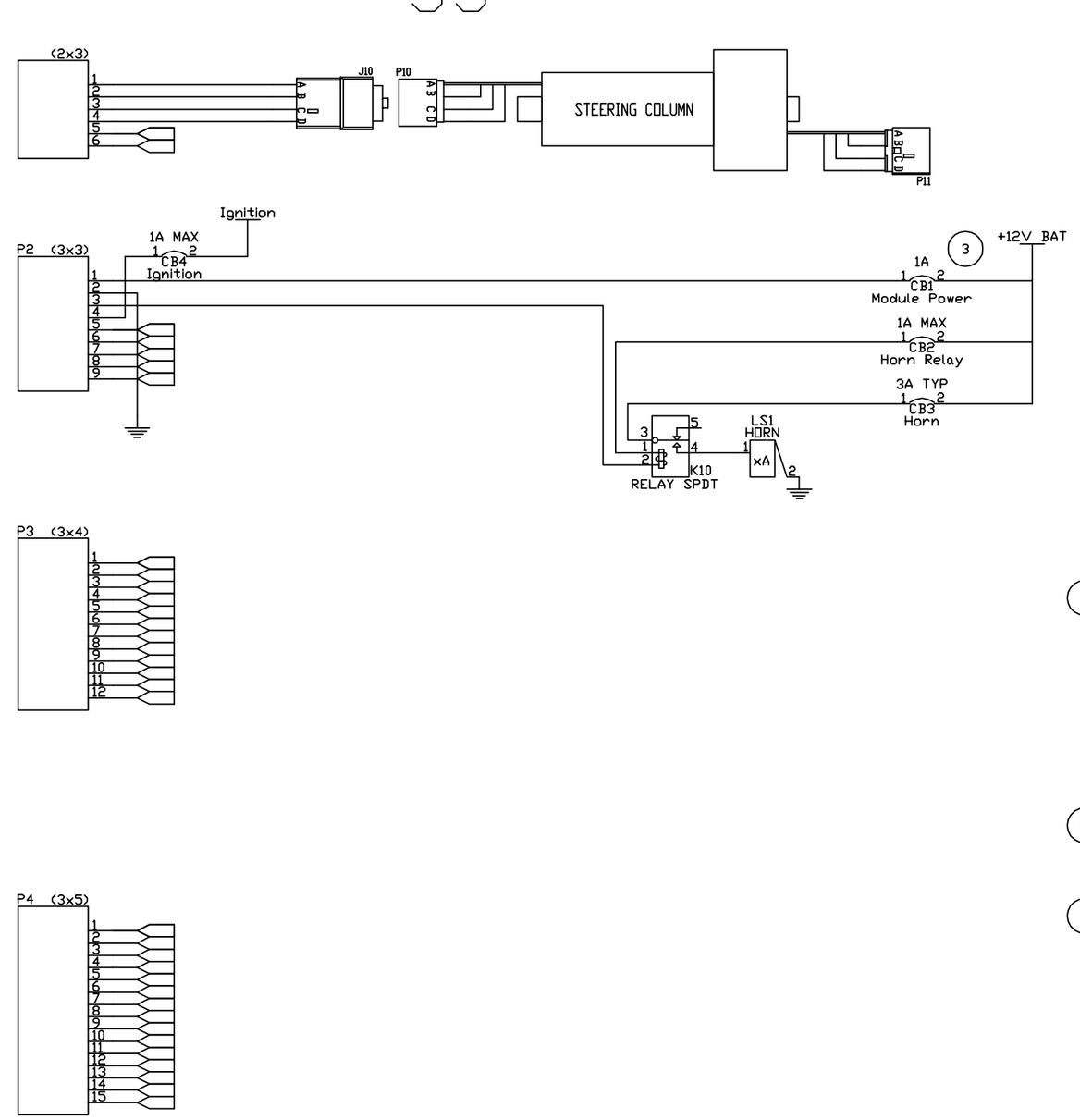

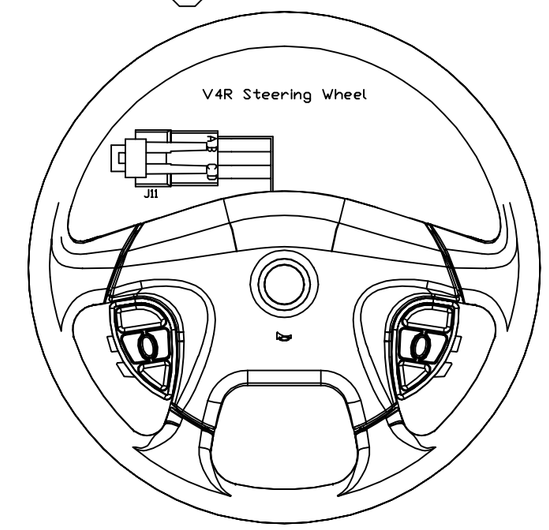

NOTES

1. Controller Current Limits:
   Relay
   - K1A 10A
   - K1B 10A
   - K2 1A
   - K3 1A
   - K4 1A
   - K5 1A
   - K6 1A
   - K7A 10A
   - K7B 10A
   - K8A 10A
   - K8B 10A

   Horn 0.5A
2. The control module is designed to mount in the passenger compartment of the vehicle. The rated operating temperature range is -40 to +85 degrees C. The control module must not be exposed to the higher operating temperatures and moisture levels typical of the engine compartment or exposed areas of the vehicle.
3. Circuit breaker ratings provided are typical or max allowable with appropriate wire selection. Proper wire and circuit protection is the responsibility of the installer. Unlabeled connections to controller other than wiper connections are rated for 1 A max.

Control Module Connectors (Harness side)
- P1: AMP 1-480704-0 Housing
- P2: AMP 1-480706-0 Housing
- P3: AMP 1-480708-0 Housing
- P4: AMP 1-480710-0 Housing
- P1-P4: AMP 350689-3 20-18 AWG socket contact

COLUMN CONNECTOR:
- J10: PACKARD 12092163 Housing
- PACKARD 12047581 AWG 20 Terminal

PART REV	DRW REV	DESCRIPTION	DATE
0	2	Preliminary	03-22-2011
0	1	Preliminary	02-15-2011
0	0	Preliminary	01-07-2011

DIM PL	ENG	MM
X.	.060	1.524
.X	.030	.762
.XX	.010	.254
.XXX	.005	.127
ANGLES ± 2°		

THIS DRAWING AND ITS INFORMATION IS CONFIDENTIAL. IT IS THE PROPERTY OF VIP INC. AND MUST NOT BE MADE PUBLIC OR USED IN ANY WAY DETRIMENTAL TO THE INTERESTS OF VIP INC.

VEHICLE IMPROVEMENT PRODUCTS INC.

DRAWN BY	TITLE	FILE NO.
DK	WIRING DIAGRAM, SM216	01778
DATE 01-07-2011	SCALE NONE	DRAWING NO. 001778-E3V-00
SIZE C		

ANTIOCH, IL USA (847)-395-7250