SM217 Control Module

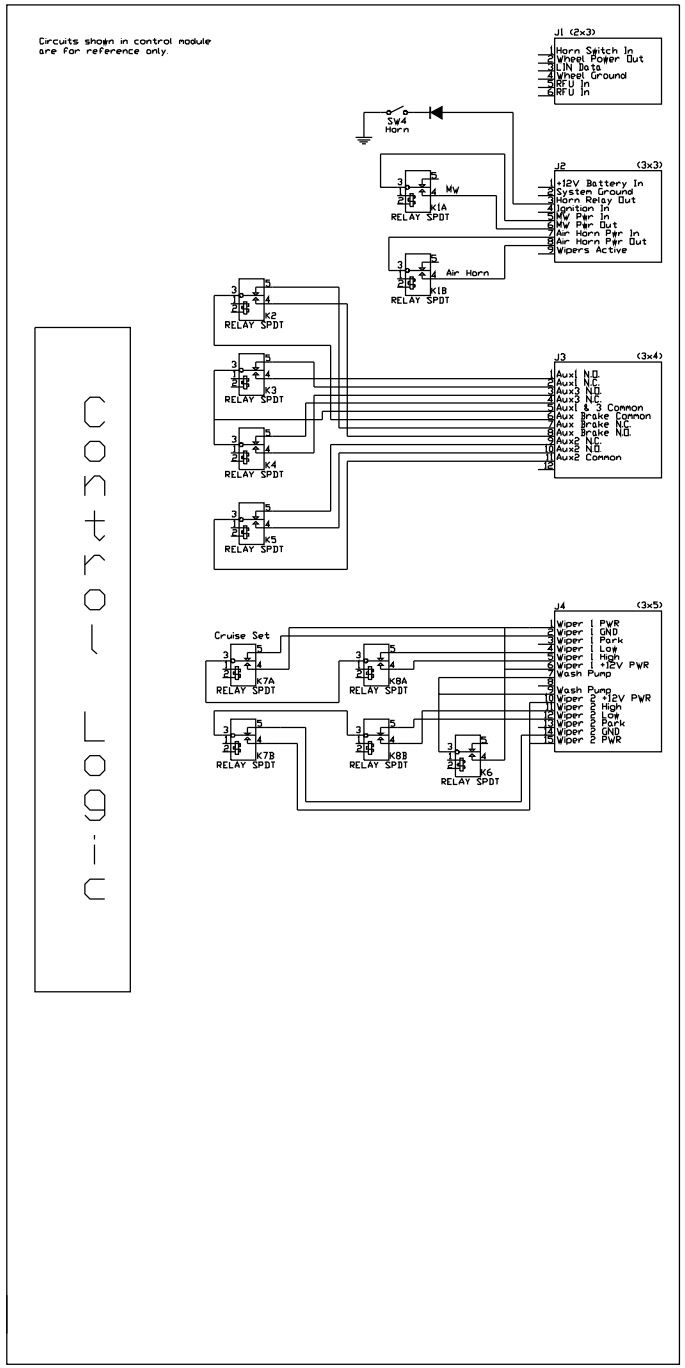

Suggested Chassis Wiring

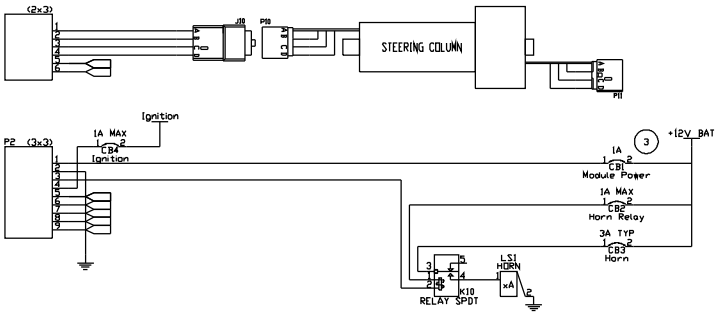

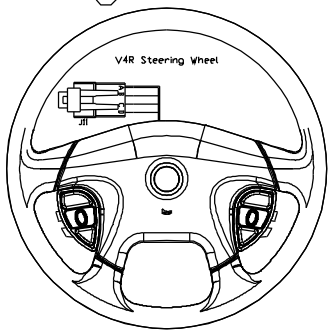

NOTES

1. Controller Current Limits:
   Relay
   K1A 10A
   K1B 10A
   K2 1A
   K3 1A
   K4 1A
   K5 1A
   K6 1A
   K7A 10A
   K7B 10A
   K8A 10A
   K8B 10A
   Horn 0.5A

2. The control module is designed to mount in the passenger compartment of the vehicle. The rated operating temperature range is -40 to +85 degrees C. The control module must not be exposed to the higher operating temperatures and moisture levels typical of the engine compartment or exposed areas of the vehicle.

3. Circuit breaker ratings provided are typical or max allowable with appropriate wire selection. Proper wire and circuit protection is the responsibility of the installer. Unlabeled connections to controller other than wiper connections are rated for 1 A max.

Control Module Connectors (Harness side)
P1: AMP 1-487704-0 Housing
P2: AMP 1-480706-0 Housing
P3: AMP 1-480708-0 Housing
P4: AMP 1-480710-0 Housing
P1-P4: AMP 350689-3 20-18 AWG socket contact

COLUMN CONNECTOR:
J10: PACKARD 12092163 Housing
PACKARD 12047581 AWG 20 Terminal

PART REV	DRW REV	DESCRIPTION	DATE
0	2	Preliminary	03-22-2011
0	1	Preliminary	02-15-2011
0	0	Preliminary	01-07-2011

DIM PL	ENG	MM
X.	.060	1.524
.X	.030	.762
.XX	.010	.254
.XXX	.005	.127
ANGLES ± 2°		

THIS DRAWING AND ITS INFORMATION IS CONFIDENTIAL. IT IS THE PROPERTY OF VIP INC. AND MUST NOT BE MADE PUBLIC OR USED IN ANY WAY DETRIMENTAL TO THE INTERESTS OF VIP INC.

VEHICLE IMPROVEMENT PRODUCTS INC.

DRAWN BY	TITLE	FILE NO.
DK	WIRING DIAGRAM, SM217	01778
DATE 01-07-2011	SCALE NONE	DRAWING NO. 001778-F3V-00
SIZE C	ANTIOCH, IL USA (847)-395-7250	